Post-Tensioned Slab Analysis

Four Seasons Building

by

Ken Bondy

Agenda

- Design
  - Conformance to original and current codes
  - Differences between this design and current standard practices
- Performance
- Conclusions and Recommendations

Design

Background and Framing

- Plans dated June 22, 1977
- "*Design per latest edition of Los Angeles Building Code*" – General Notes
- 2-Way 8.5" post-tensioned slab
  - Typical 30.5'x30.5' bays (L/h=43<45)
  - Perimeter 24"x30" ductile frame
  - 48"x48"x7.5" caps at interior columns
  - All columns 24"x24"
  - Basket-weave tendon distribution (60%/40%)
  - Lightweight concrete

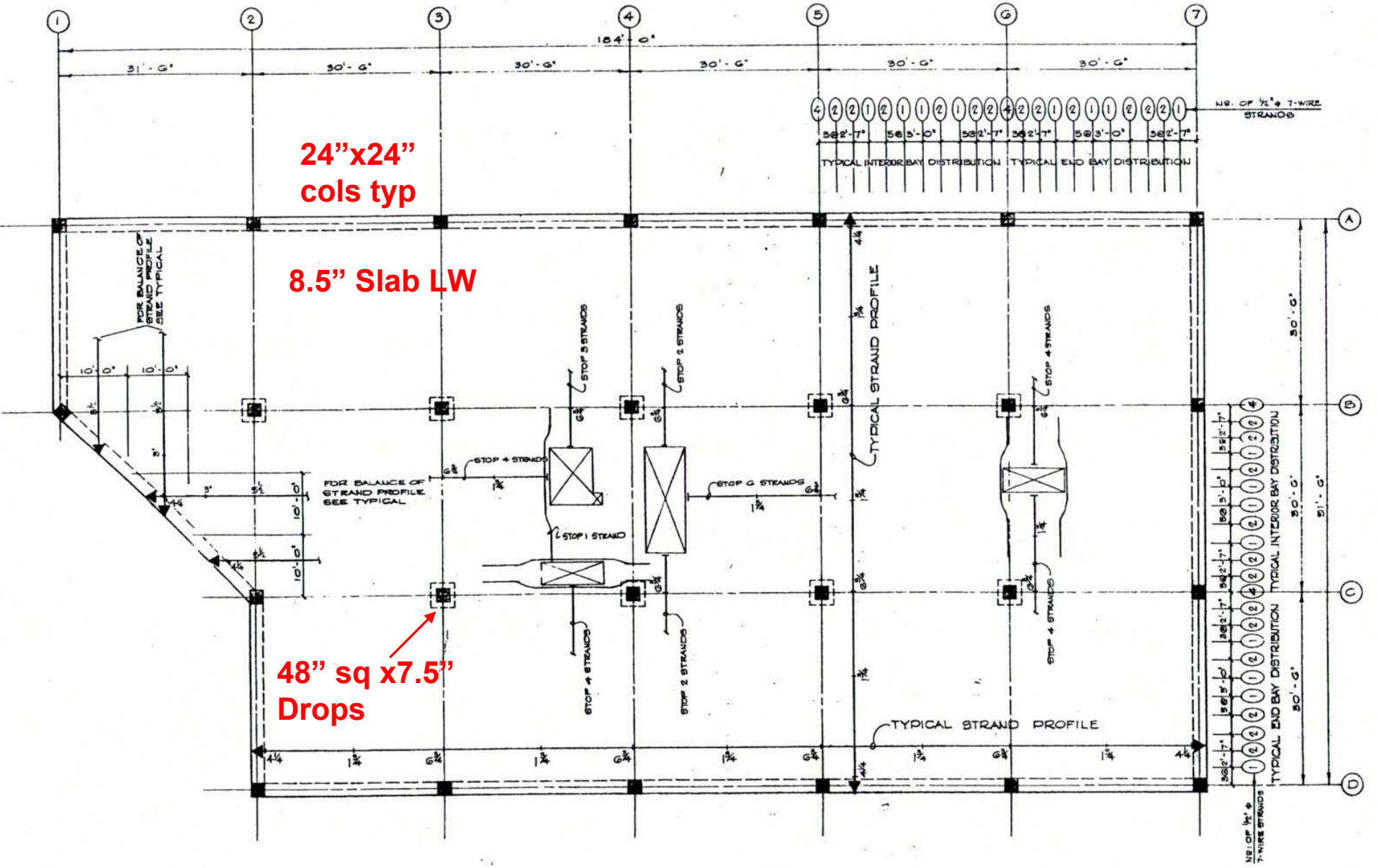

First Floor Plan (Typical of 2nd and 3rd Floors)

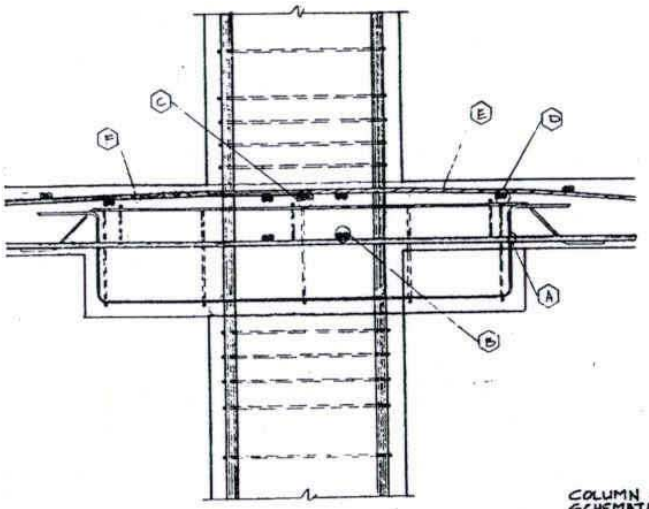

SECTION 2
1½" = 1'-0"

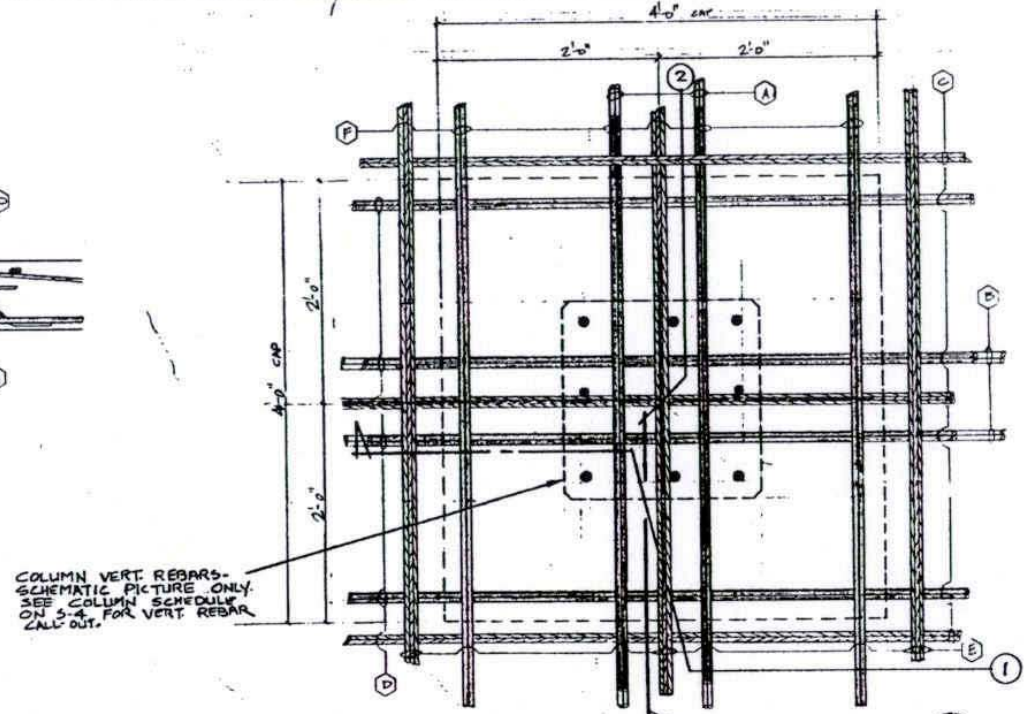

PLAN
1½" = 1'-0"

TYP. INTERIOR COLUMN-SLAB DETAIL 3

LEGEND

- (A) LOWER BOTTOM REBAR
- (B) UPPER BOTTOM REBAR
- (C) LOWER STRAND
- (D) LOWER TOP REBAR
- (E) UPPER STRAND
- (F) UPPER TOP REBAR

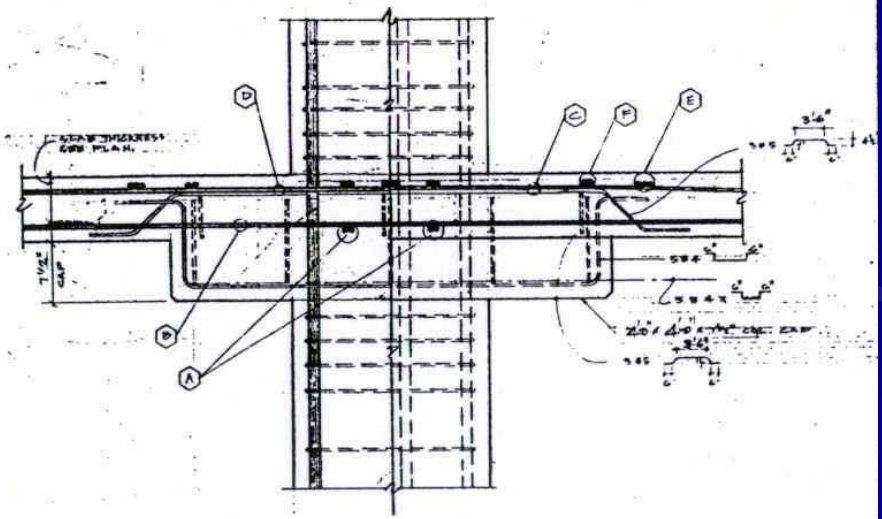

SECTION 1
1½" = 1'-0"

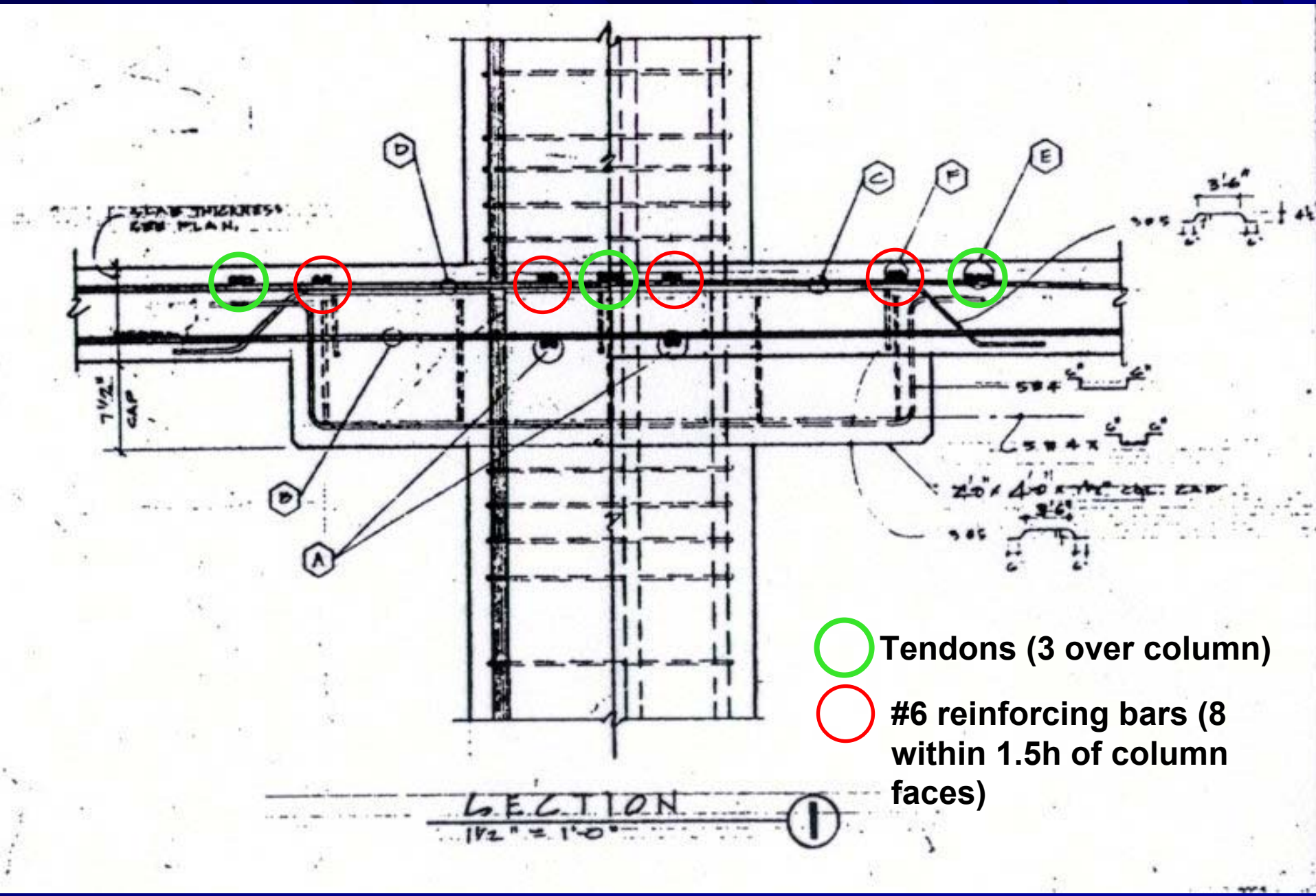
SECTION
1
Tendons (3 over column)
#6 reinforcing bars (8 within 1.5h of column faces)

Differences – Then and Now

- Basket-weave tendon layout
  - Lightweight concrete
- Tendon cover (1.5” vs 0.75”)
- High Demand/Capacity Ratio for gravity loads alone

Flexural Design

- Fully in conformance with original and current codes and standard practices
  - Slab thickness
  - Prestress force
  - Non-prestressed reinforcement
    - Bottom bars over column (4-#5x15’-0”)
    - Reinforcement in drop caps

Punching Shear Design

- Was conformant for vertical loads
- Did not leave much (any?) margin for seismic-induced bending or shear forces

Punching Shear Theory

- All shear and moment transfer is assumed to be resisted by stresses acting on "critical sections" in the slab located at a distance of d/2 from the face of columns or changes in cross-section (drops)
- Stresses on critical sections are limited to maximum values specified in the ACI code.

Locations of Assumed Punching Shear Critical Sections for 2-Way Slabs with Shear Drops (Interior Columns)

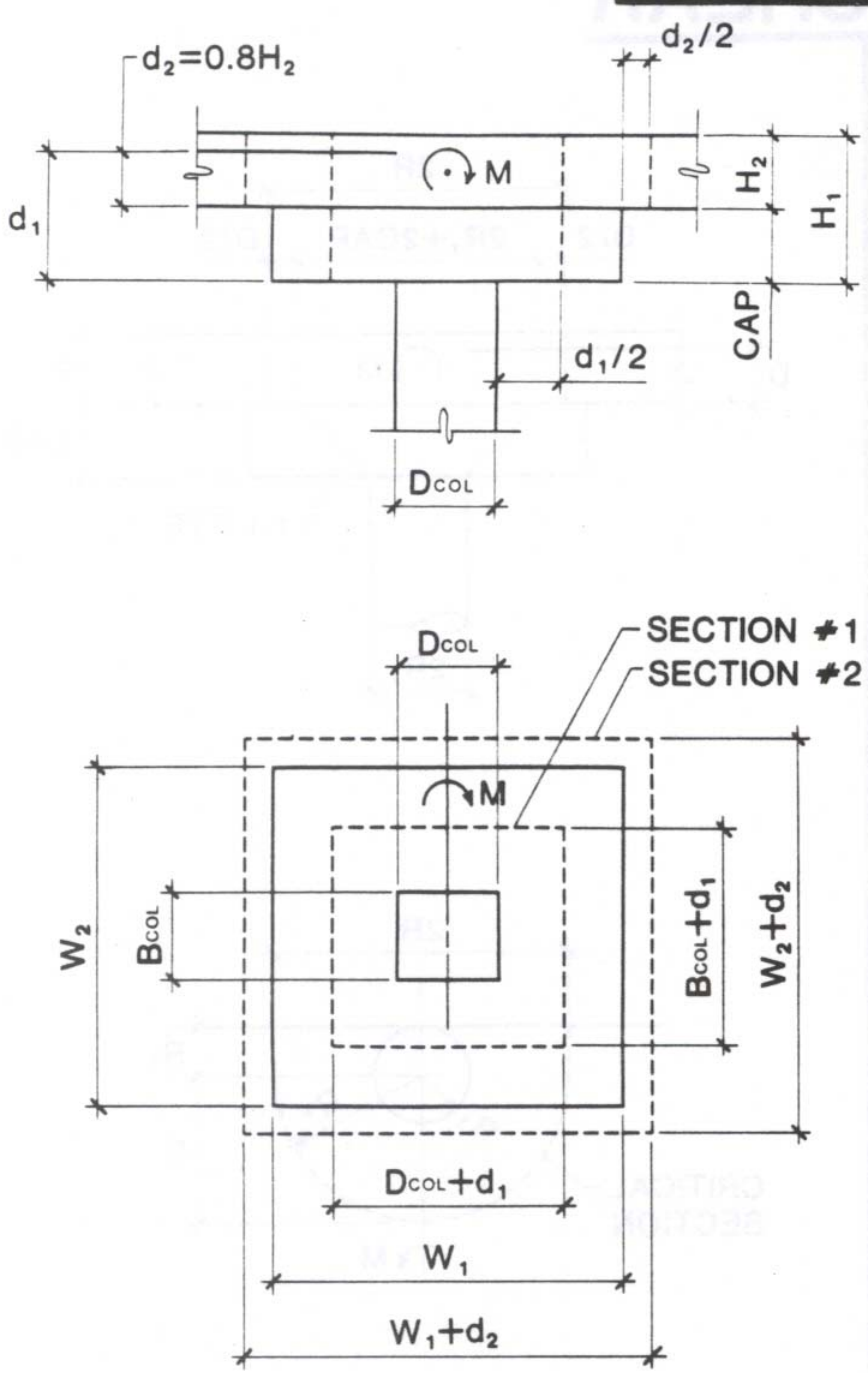

Design for Factored Gravity Loads

(Slide by Joe Maffei, SEAONC)

Unbalanced moment

Direct shear

Part Transferred by shear

Part Transferred by flexure

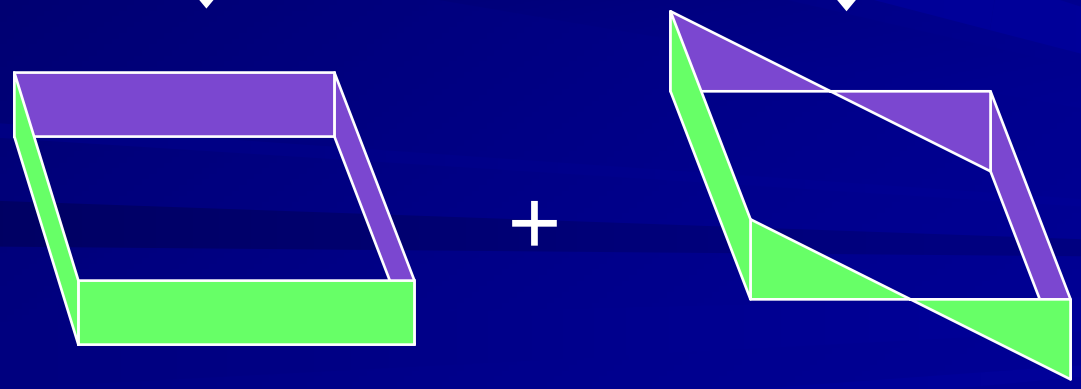

Format for ACI 318 Equation for Allowable Punching Shear Stress

$$v_{cn} = \phi\left(\lambda C\sqrt{f_c'} + 0.3f_{pc}\right)$$

λ = coefficient for lightweight concrete (typically 0.75)

$C = 3.5$ or $\beta_p = \alpha_s d/b_0 + 1.5 \leq 3.5$

Changes in ACI 318 Allowable Punching Shear Stress Since 1971

Year	LF	ϕ	C	#	v_{cn}
1971	1.4/1.7	0.85	None	---	---
1977	1.4/1.7	0.85	None	---	---
1983	1.4/1.7	0.85	3.5	11-42	181
1989	1.4/1.7	0.85	β_p	11-39	151
1995	1.4/1.7	0.85	β_p	11-38	151
1999	1.4/1.7	0.85	β_p	11-38	151
2002	1.2/1.6	0.75	β_p	11-36	133

Allowable Shear Stress Now ACI 318-02 Eqn. (11-36)

$$v_{cn} = 0.75(0.75\beta_p\sqrt{f_c'} + 0.3f_{pc})$$

$$v_{cn} = 0.75(0.75\left(\frac{\alpha_s d}{b_0} + 1.5\right)\sqrt{4000} + 0.3(159))$$

$$v_{cn} = 0.75(0.75\left(\frac{40x6.8}{4x54.8} + 1.5\right)\sqrt{4000} + 0.3(159))$$

$$v_{cn} = 133\ psi$$

Actual Applied Shear Stress (psi)

Evaluated Using v_{cn}=181 psi

	30 psf	50 psf
1.2D+1.6L	123	145
1.4D+1.7L	140	164
1.5D+1.8L	150	174

Actual Applied Shear Stress (psi)

Evaluated Using v_{cn}=151 psi

	30 psf	50 psf
1.2D+1.6L	123	145
1.4D+1.7L	140	164
1.5D+1.8L	150	174

Actual Applied Shear Stress (psi)

Evaluated Using v_{cn}=133 psi

	30 psf	50 psf
1.2D+1.6L	123	145
1.4D+1.7L	140	164
1.5D+1.8L	150	174

My Personal Opinion…

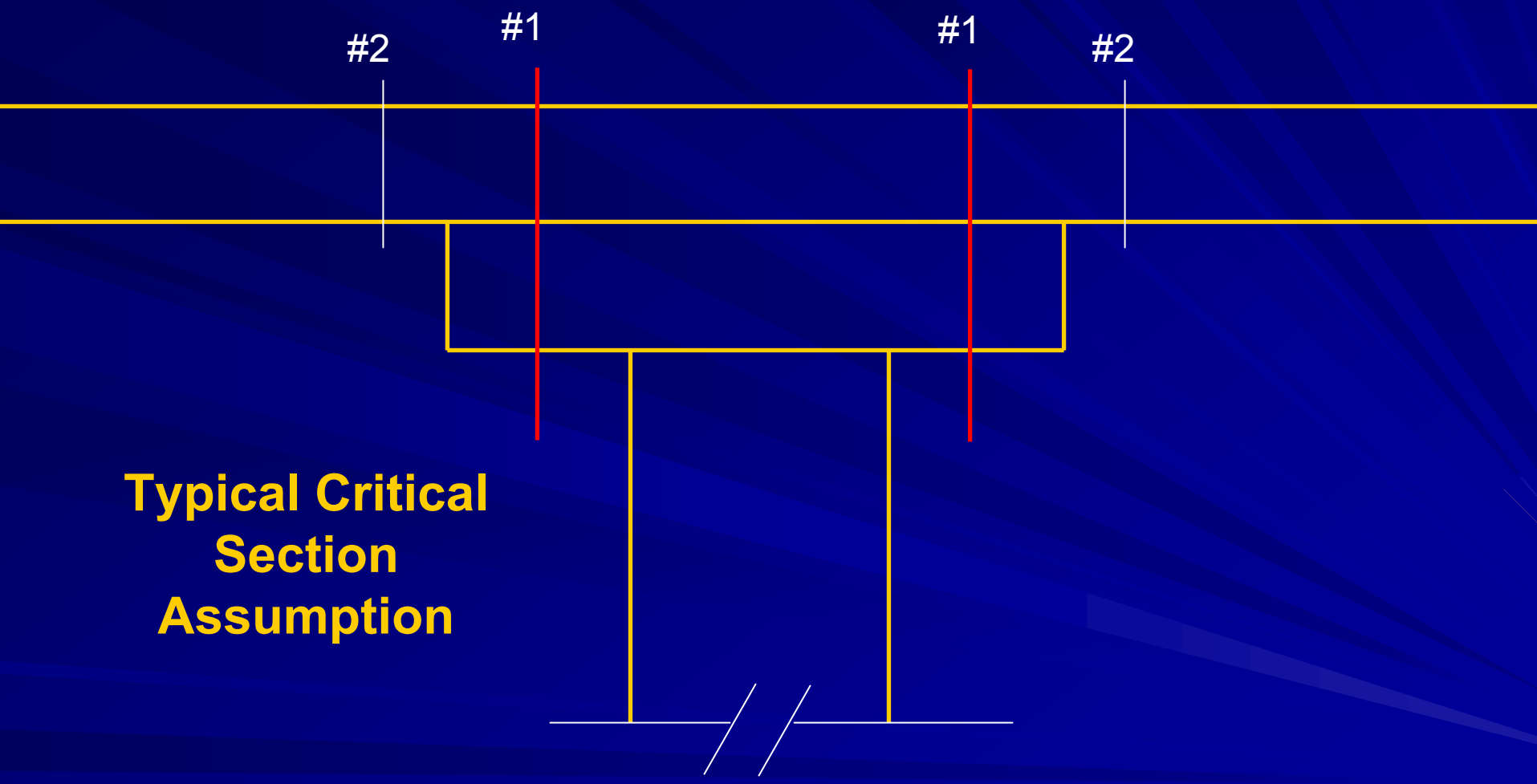

Typical Critical Section Assumption

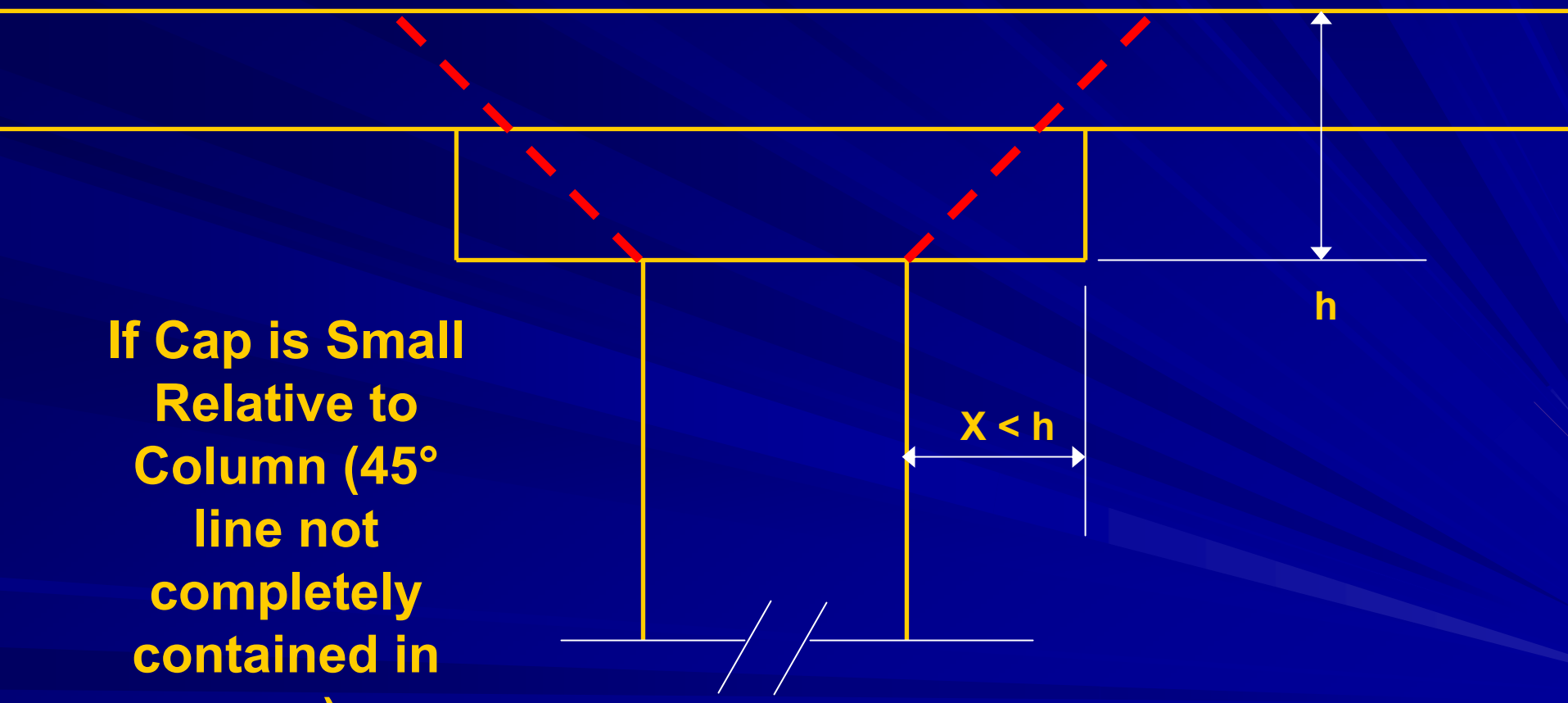

If Cap is Small Relative to Column (45° line not completely contained in cap)

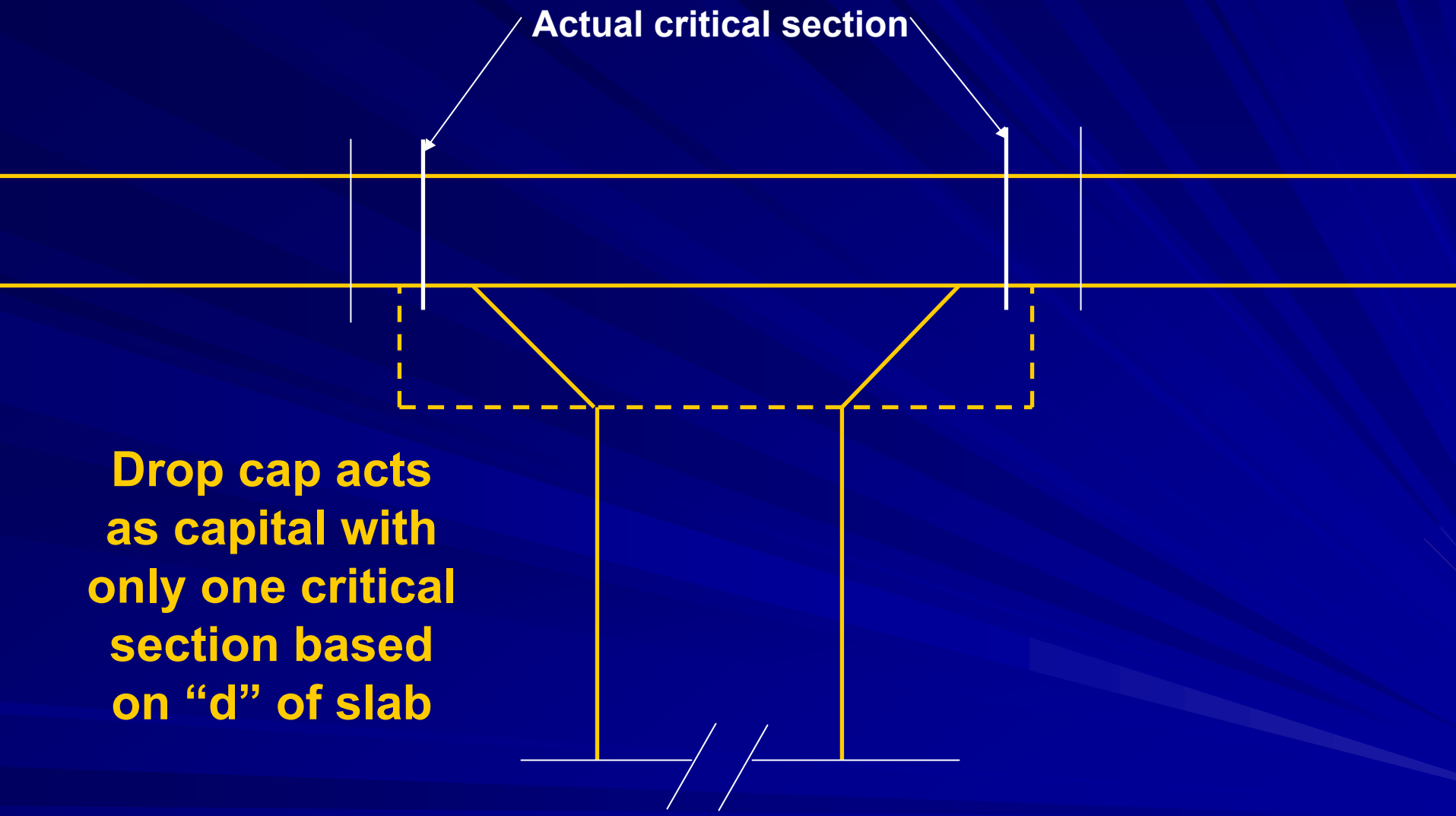

Drop cap acts as capital with only one critical section based on “d” of slab

Performance

Perspective

- Building did not collapse under a design level earthquake – life safety was protected
- Integrity reinforcement (tendons over columns and bottom bars) did the job
- Many primary punching shear failures occurred but slabs were restrained from sliding down columns by catenary action of tendons and bottom reinforcing steel
- Nonetheless…..

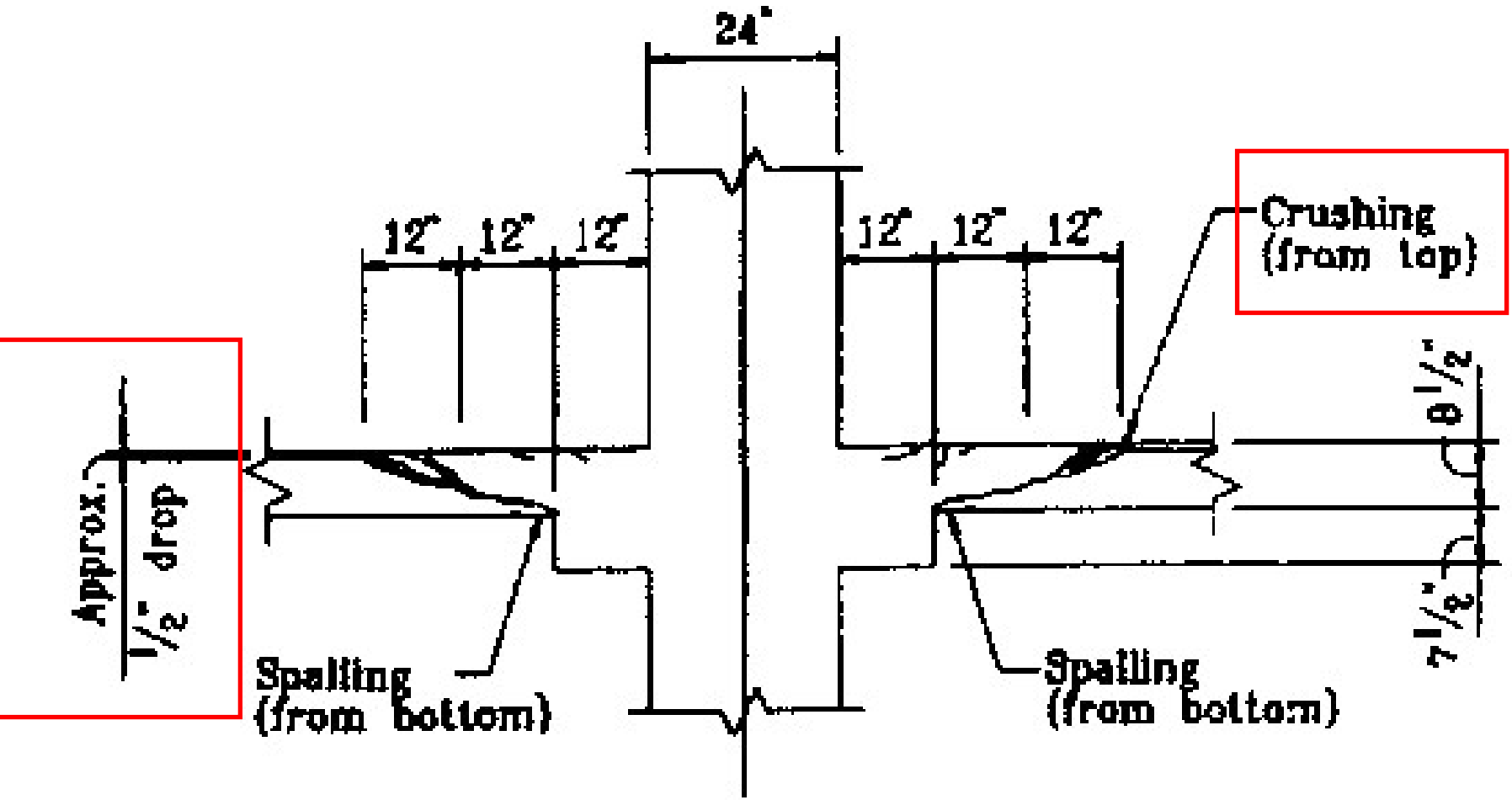

Typical Slab Cracking

Section A-A

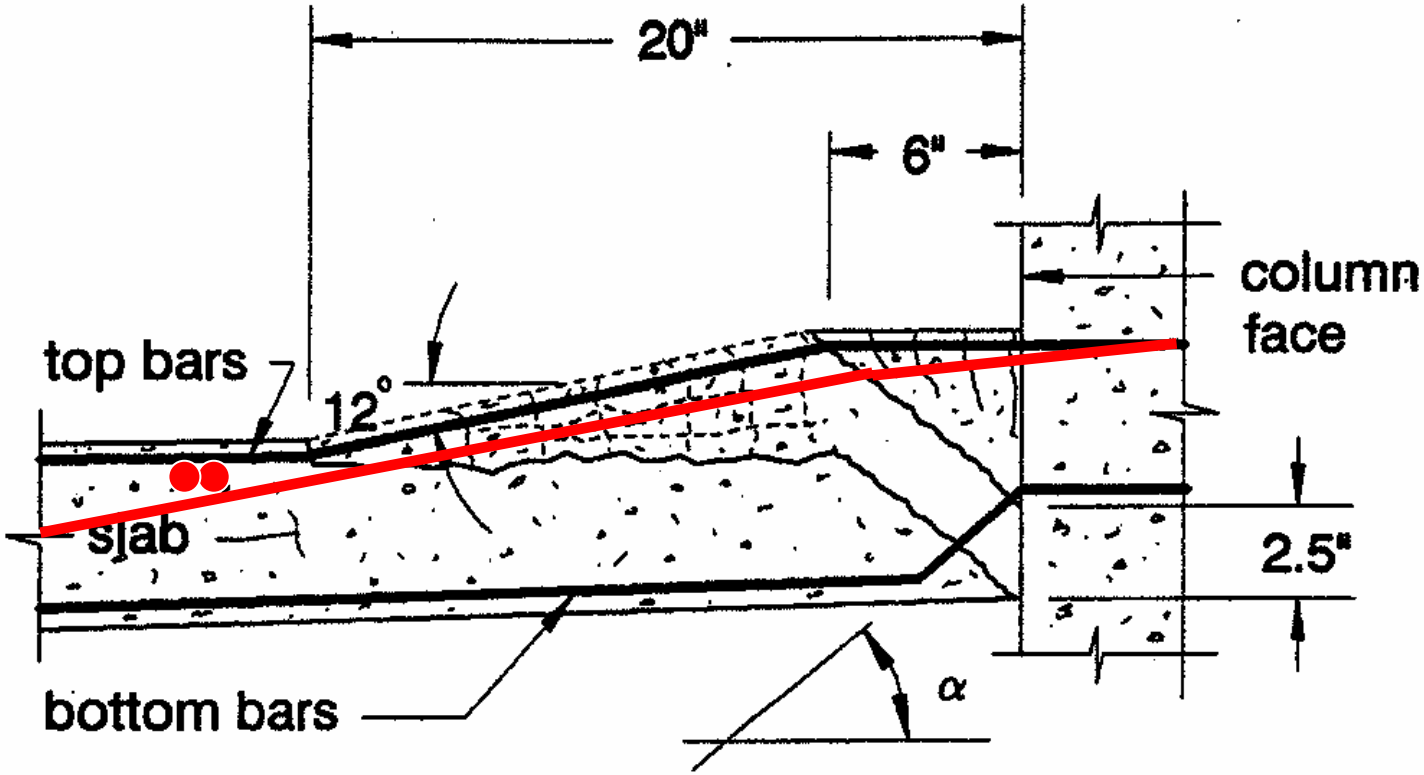

Slab vertical displacement of 2.5" inferred from equal vertical movement of column after punching.

Inclination of top slab bars deduced from extent of spalling, vertical column movement, and average slab inclination prior to punching.

Fig. 9—Post-punching behavior of slab-column connections (1 in. = 25.4 mm)

Pan & Moehle 1992

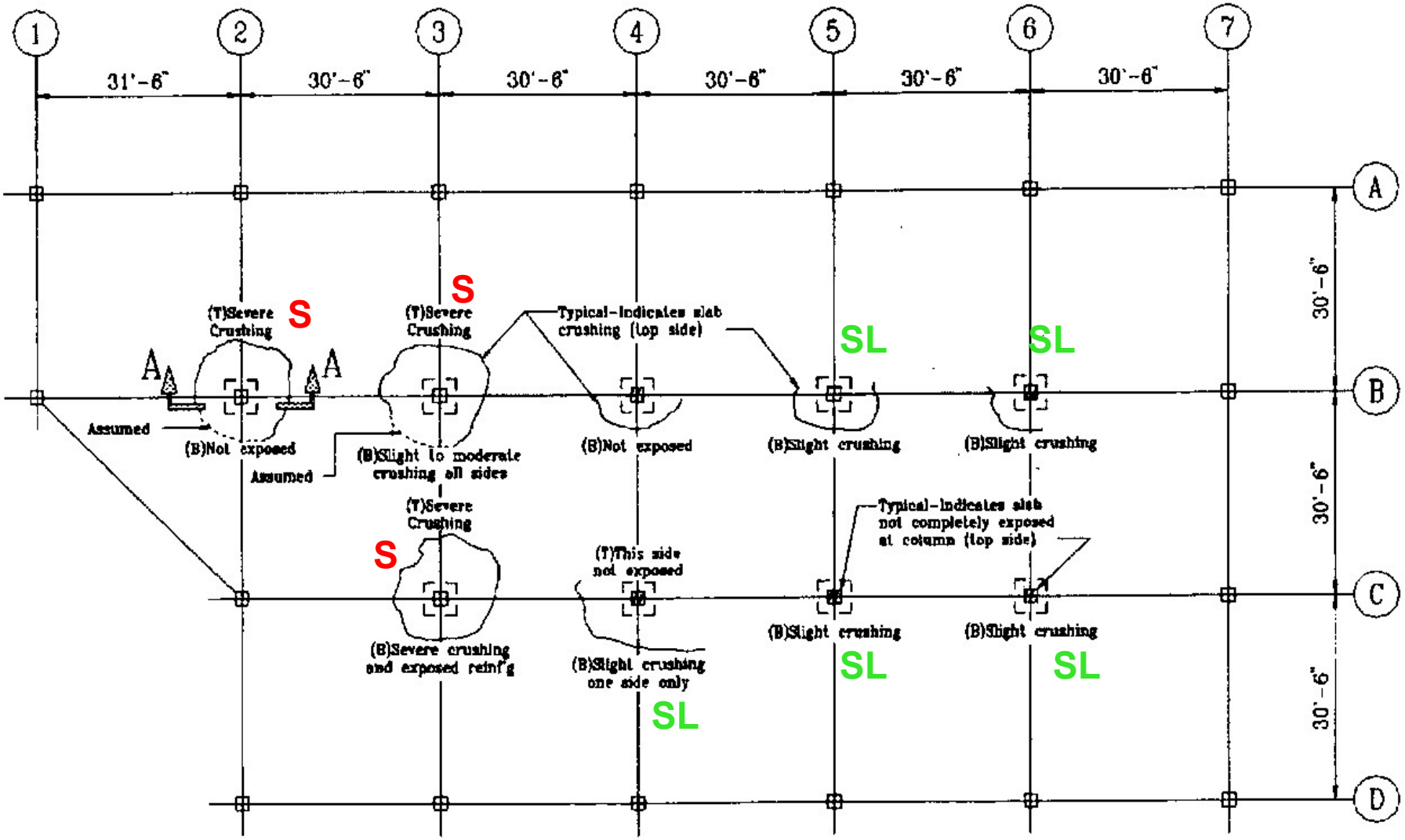

Figure 5. First Floor Slab Observed Damage

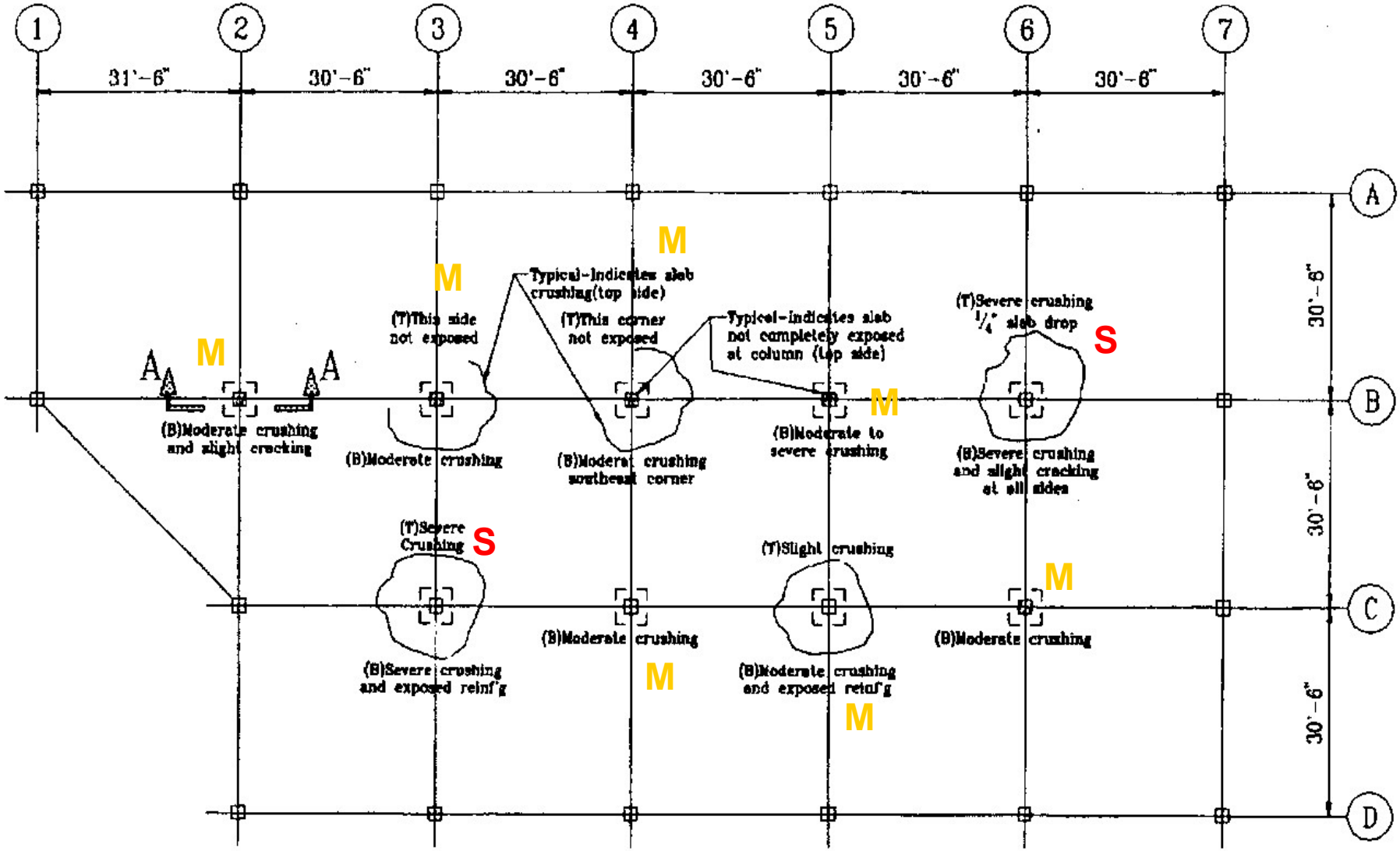

Figure 6. Second Floor Slab Observed Damage

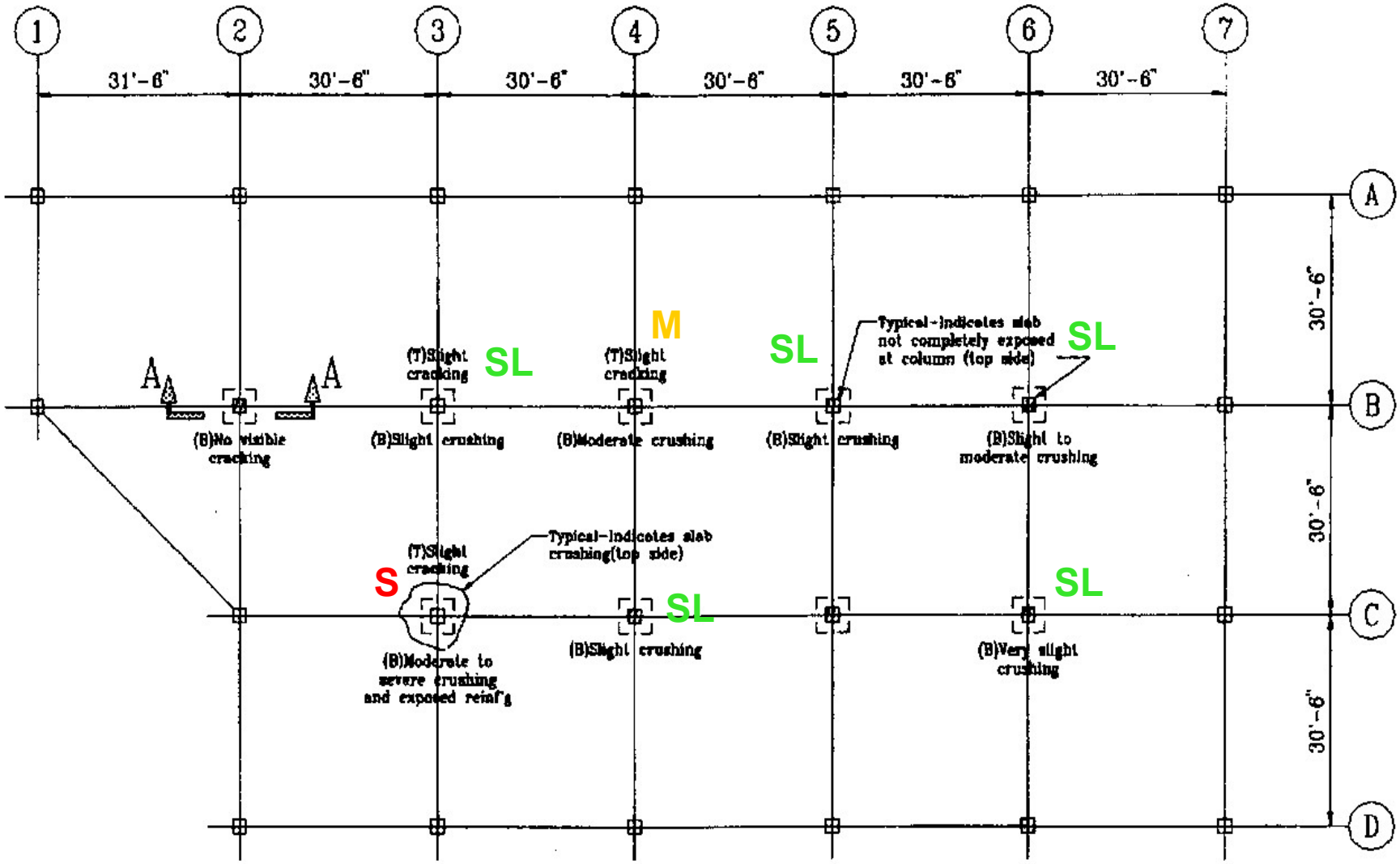

Figure 7. Third Floor Slab Observed Damage

Punching Shear Damage

Conclusions and Recommendations

Possible Reasons

- Vertical accelerations
- Inadequate capacity to resist seismic-induced deformations and forces (no excess capacity beyond gravity loads)
- Higher permissible shear stress (133 psi now vs 181 psi then)
- Lightweight concrete – is 0.75 factor sufficient?
- Relative dimensions of cap versus column

IBC 2003 Requirement

- **1908.1.6** Modifies ACI 318-02:

- **21.11.1** – Frame members assumed not to contribute to lateral resistance….Slab-column connections shall comply with Sections **21.11.5** through **21.11.7**.

Section 21.11.5

- Punching shear reinforcement required in accordance with 21.11.5.1 and 21.11.5.2 when story drift ratio exceeds [0.035-0.05($V_u/\phi V_c$)]. Exceptions:
  - $V_u/\phi V_c \leq 0.2$
  - Story drift ≤ 0.005
- $V_u = 1.2D + 1.0L + 0.2S$. Factor on L can be reduced to 0.5 in accordance with 9.2.1(a).
- Shear reinforcement required by this section cannot be less than that required for gravity loads.

Punching Shear Reinforcement

- **21.11.5.1** – $V_s \geq 3.5\sqrt{f'_c}(b_0 d)$ *[typo]*
- **21.11.5.2** – Shear reinforcement extends 5t minimum from faces of columns.
- **21.11.6** – Splices in reinforcement
- **21.11.7** – Bottom reinforcement A_s = *0.004A* for slab area *1.5h* on each side of column. Extends *5t* minimum from faces of columns.

Change in ACI 318-05

- **21.11 – Frame members not proportioned to resist forces induced by earthquake motions**
- **21.11.5** – For slab-column connections of two-way slabs without beams, slab shear reinforcement satisfying the requirements of **11.12.3** and providing V_s not less than $3.5\sqrt{f'_c}\, b_o d$ shall extend at least 4 times the slab thickness from the face of the support, unless either (a) or (b) is satisfied.

Not Required if Either of the Following are Satisfied…

- **(a)** The requirements of **11.12.6** using the design shear V_u and the induced moment transferred between the slab and column under the design displacement.

- **(b)** The design story drift ratio does not exceed the larger of 0.005 and [0.035-0.05($V_u/\phi V_c$)]

Recommendations

- Test undamaged joints in actual building
- Test joints with lightweight concrete in laboratory.

Thank You!!